Braukmann
CD06F-LFA

AutomatikCentret
Strandvejen 42 • Saksild • 8300 Odder
86 62 63 64 • www.automatikcentret.dk
info@automatikcentret.dk

Pressure Reducing Valve

Lead-free combination of Pressure Reducing Valve and check Valve

APPLICATION

According EN 806-2 pressure reducing valves of this type protect household water installations against excessive pressure from the supply. They can also be used for industrial or commercial applications within the range of their specification.

By installing a pressure reducing valve, pressurisation damage is avoided and water consumption is reduced.

The set pressure is also maintained constant, even when there is wide inlet pressure fluctuation.

Reduction of the operating pressure and maintaining it at a constant level minimizes flow noise in the installation.

Check valves of this type are particularly suitable for integral use with pipeline appliances such as water meters. Check valves are safety devices for independent prevention of water backflow, for example from drinking water appliances back into the central water supply system.

They can also be used for industrial, commercial and similar systems where back pressure, backflow and back syphonage must be prevented.

The classicfications of appliances to meet these requirements are specified in EN 1717.

APPROVALS

- DVGW
- WRAS (up to 23 °C)
- VA (ETA)
- SINTEF

SPECIAL FEATURES

- Inlet pressure balancing – no influence on outlet pressure by fluctuating inlet pressure
- Up to size 1$^{1}/_{4}$" approved by LGA for low noise, Group 1 without limitations
- The valve insert is of high-quality synthetic material and can be fully exchanged
- The outlet pressure is set by turning the adjustment knob
- The set pressure is directly indicated on the set point scale
- The adjustment spring is not in contact with the drinking water
- Integral fine filter
- Also available without fittings
- Conforms to BSEN 1567
- All materials are UBA conform
- ACS certified
- Lead-free material
- Universal application
- Easy installation
- Quiet operation
- Creates no shock pressure loadings
- Suitable for installation in any position
- Low pressure loss

TECHNICAL DATA

Media	
Medium:	Drinking water
Connections/Sizes	
Connection sizes:	$^1/_2$" - 2"
Nominal sizes:	DN15 - DN50
Pressure values	
Max. inlet pressure with clear filter bowl:	16 bar
Max. inlet pressure with brass filter bow:	25 bar
Outlet pressure:	1.5 - 6 bar
Preset outlet pressure:	3 bar
Min. pressure drop:	1 bar
Operating temperatures	
Max. operating temperature medium with clear filter bowl:	40 °C
Max. operating temperature medium with brass filter bowl:	70 °C *

* max. operating pressure 10 bar

Note: Use the SM06T brass filter bowl, if the valve can be exposed to UV radiation or solvent vapors.

Technical Data RV260-LFA

Media	
Medium:	Drinking water
Connections/Sizes	
Connection size:	Male threaded union R$^1/_2$" - R2" Female threaded union G$^3/_4$" - G2$^1/_2$"
Pressure values	
Operating pressure:	approx. 0.03 bar
Max. inlet pressure:	10.0 bar
Operating temperatures	
Max. operating temperature medium:	5 - 40 °C
Specifications	
Liquid category:	2 (no hazardous materials)

CONSTRUCTION

Overview

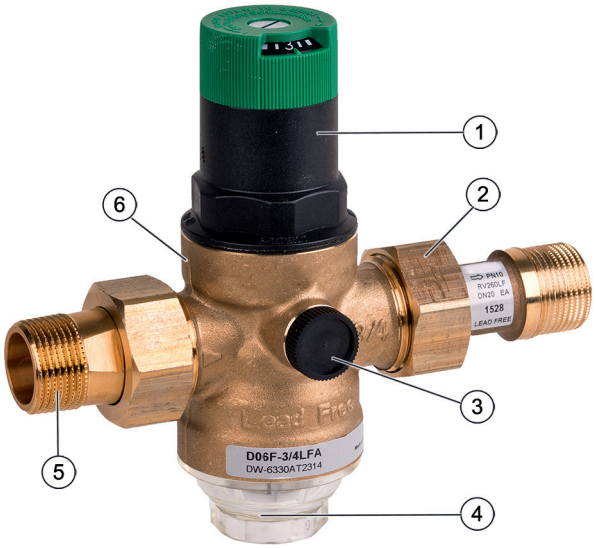

	Components	Materials
1	Spring bonnet with adjustment knob and setting scale	High-quality synthetic material
2	Union nut with internal thread	Brass
3	Pressure gauge connection	-
4	Filter bowl	Clear synthetic or brass
5	Threaded male connections (options A & B)	Brass
6	Housing with pressure gauge connections on both sides	Dezincification-resistant brass
	Not depicted components:	
	Adjustment spring	Spring steel
	Valve insert complete with diaphragm and valve seat	High-quality synthetic material, EPDM diaphragm
	Fine filter with 0.16 mm mesh	Stainless steel
	Pressure gauge (see accessories)	High-quality synthetic material
	Seals	EPDM
	Check valve insert	High grade synthetic material check valve cartridge
	Test plug with seal ring	Lead-free brass
	Sealing elements	EPDM and cooper

METHOD OF OPERATION

Spring loaded pressure reducing valves operate by means of a force equalising system. The force of a diaphragm operates against the force of an adjustment spring. If the outlet pressure and therefore diaphragm force fall because water is drawn, the then greater force of the spring causes the valve to open. The outlet pressure then increases until the forces between the diaphragm and the spring are equal again.

The inlet pressure has no influence in either opening or closing of the valve. Because of this, inlet pressure fluctuation does not influence the outlet pressure, thus providing inlet pressure balancing.

Spring loaded check valves have a moving seal disc which is lifted off the seat by a greater or lesser amount depending on the flow rate through the valve. If the flow falls towards zero, then the spring pushes the disc back onto the seat and seals the waterway.

To ensure continuing correct function it is recommended that check valves be regularly checked and maintained (as specified in EN 1717).

TRANSPORTATION AND STORAGE

Keep parts in their original packaging and unpack them shortly before use.

The following parameters apply during transportation and storage:

Parameter	Value
Environment:	clean, dry and dust free
Min. ambient temperature:	5 °C
Max. ambient temperature:	55 °C
Min. ambient relative humidity:	25 % *
Max. ambient relative humidity:	85 % *

*non condensing

INSTALLATION GUIDELINES

Setup requirements

- Install in horizontal pipework with filter bowl downwards
- Install shut-off valves
- The device downstream should be protected by means of a safety valve (installed downstream of the pressure reducing valve). In these cases the delivery pressure of the pressure reducing valve shall be set to at least 20 % below the response pressure of the pressure relief-valve according to EN 806-2
- The installation location should be protected against frost and be easily accessible
  - Pressure gauge can be read off easily
  - With clear filter bowl, degree of contamination can be easily seen
  - Simplified maintenance and cleaning
- Install downstream of the filter or strainer
- Provide a straight section of pipework of at least five times the nominal valve size after the pressure reducing valve (in accordance with EN 806-2)
- Requires regular maintenance in accordance with EN 806-5

Installation Example

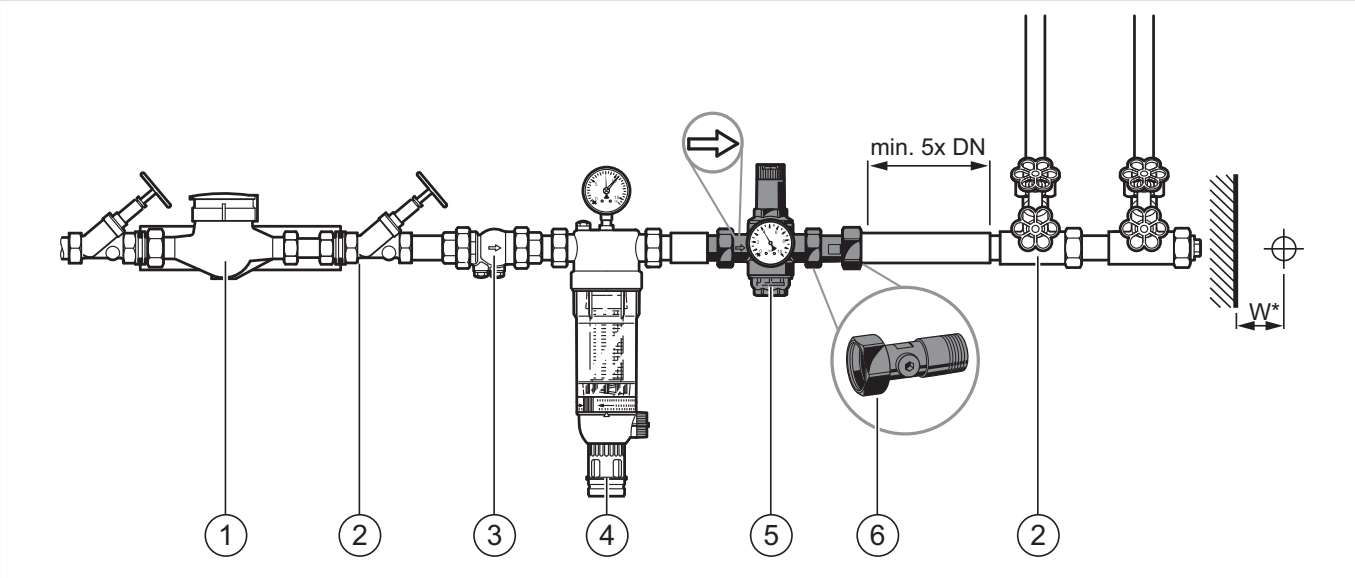

Fig. 1 Standard installation example for the pressure reducing valve

1 Water meter
2 Shut-off valve
3 Check valve
4 Filtering unit
5 Pressure reducing valve
6 Backflow Preventer

Connection sizes:						
DN:	15	20	25	32	40	50
inch:	$^1/_2$"	$^3/_4$"	1"	$1^1/_4$"	$1^1/_2$"	2"
Distance in mm (W*):	55	60	60	60	70	70

* Required installation distances between the centerline of the pipework and the surrounding in dependency of the connection size.

TECHNICAL CHARACTERISTICS

kvs-Values

Connection sizes:	**15**	**20**	**25**	**32**	**40**	**50**
k_{vs}-value (m^3/h):	2.4	3.1	5.8	5.9	12.6	12.0
k_{vs}-value (m^3/h):	6.0	10.0	15.0	28.0	41.0	70.0
IfBt designation:	P-IX 1582/I	P-IX 1582/I	P-IX 1582/I	P-IX 1582/I	- *	- *
DVGW registration number:	DW-6330 AT 2314					

* Compulsory testing in sizes R $^1/_2$" to R 1 $^1/_4$

Pressure drop characteristics

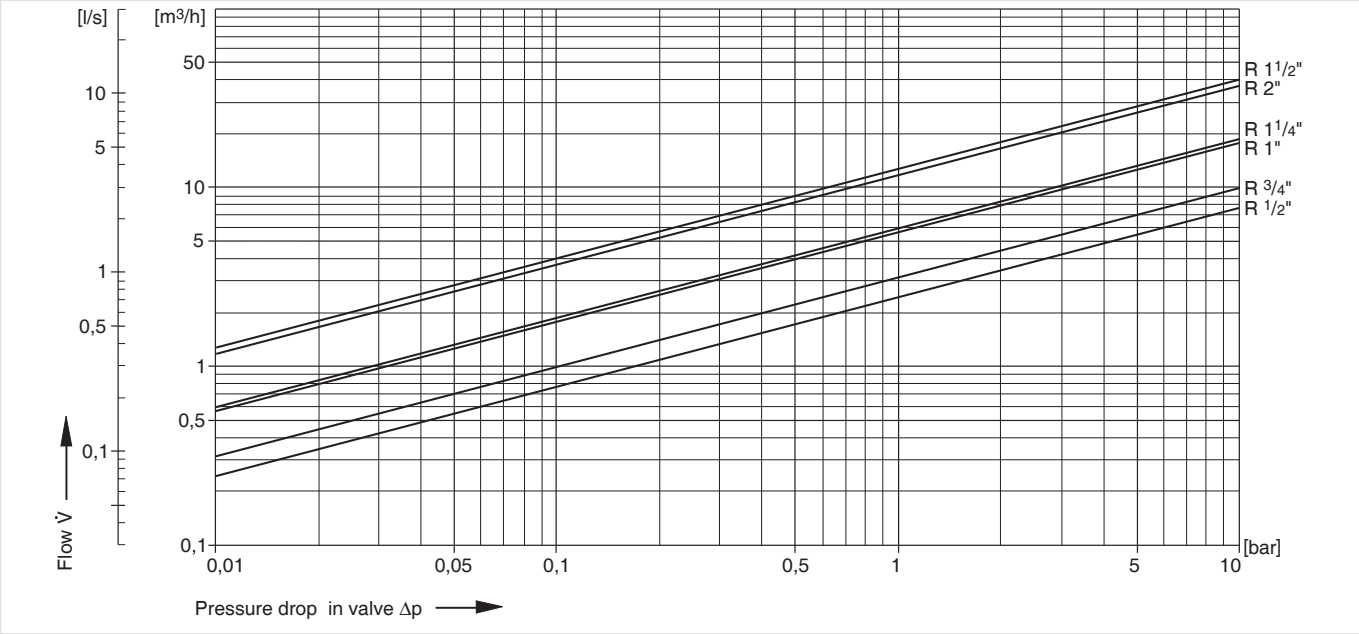

Fig. 2 Pressure drop within the valve in dependency of the flow rate and the used connection size

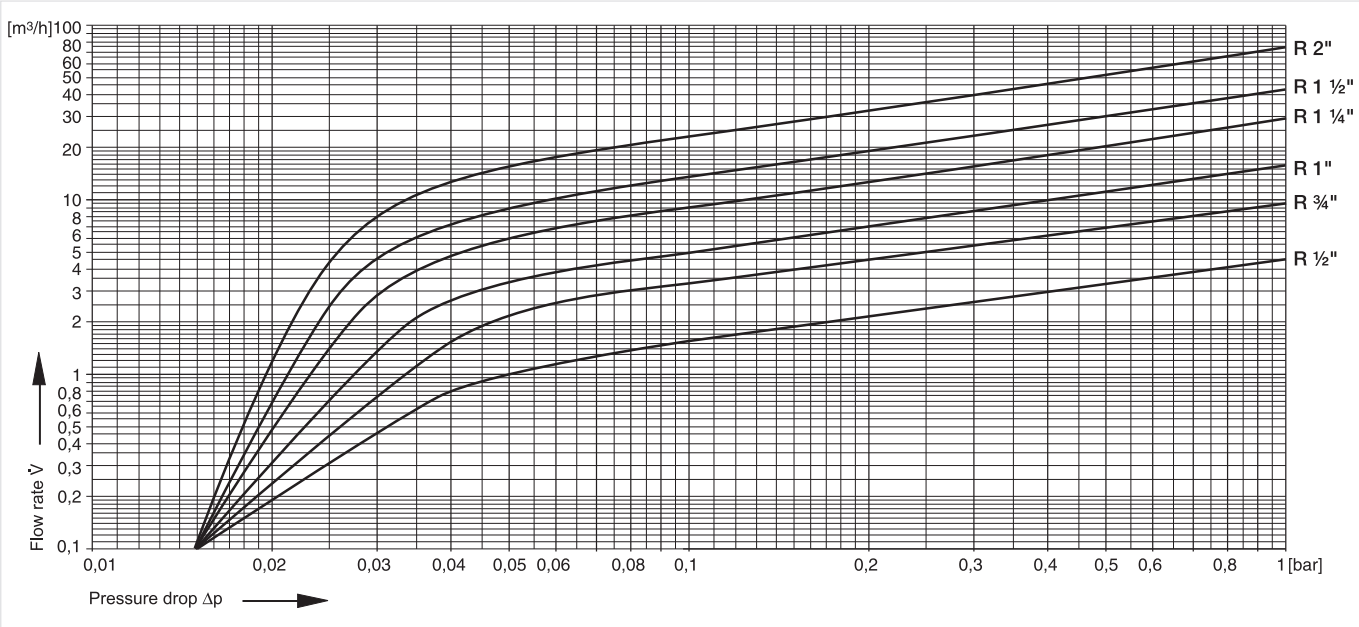

Fig. 3 Pressure drop within the valve in dependency of the flow rate and the used connection size

DIMENSIONS

Overview

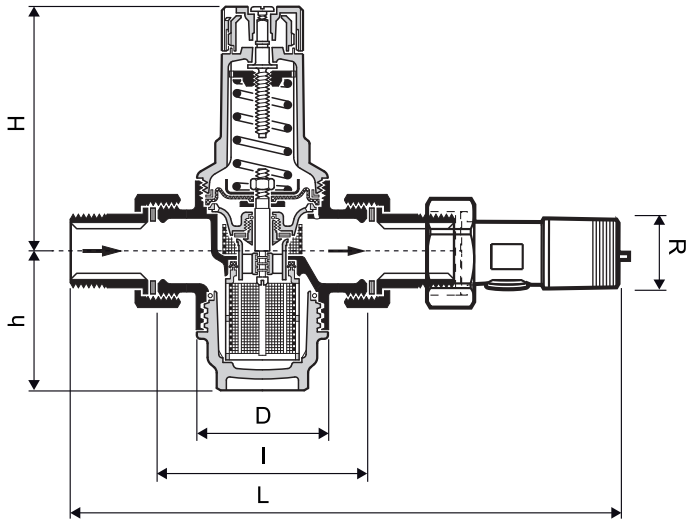

Parameter		Values					
Connection sizes:	R	1/2"	3/4"	1"	1 1/4"	1 1/2"	2"
Nominal size diameter:	DN	15	20	25	32	40	50
Nominal size diameter:	G	3/4"	1"	1 1/4"	1 1/2"	2"	2 1/2"
Test and drain plug:	R	1/8"	1/4"	1/4"	1/4"	1/4"	1/4"
Weight:	kg	0.8	1.0	1.4	2.0	3.3	4.5
Dimensions:	L	xx	xx	xx	xx	xx	xx
	l	80	90	100	105	130	140
	H	89	89	111	111	173	173
	h	58	58	64	64	126	126
	D	54	54	61	61	82	82
Nominal flow rate at Δp = 0.15 bar	m^3/h	1.8	3.8	5.8	10.8	15.9	27.1
SINTEF:		Product certificate 3139					
VA:		1.55/19260					
DVGW (internal check valve):		NW – 6312 AS2269					

Note: All dimensions in mm unless stated otherwise.

ORDERING INFORMATION

The following tables contain all the information you need to make an order of an item of your choice. When ordering, please always state the type, the ordering or the part number.

Options

The valve is available in the following sizes: $^1/_2$", $^3/_4$", 1", $1^1/_4$", $1^1/_2$" and 2".

• standard

- not available

		D06F-...A	D06F-...B	D06F-...E
Max. operating temperature medium:	40 °C	•	–	•
	70 °C	–	•	–
Filter bowl:	clear	•	–	•
	brass	–	•	–
Connection type:	external threaded connection set on in- and outlet	•	•	–
	external thread on in- and outlet	–	–	•

Note: ... = space holder for connection size

Note: Ordering number example for $1^1/_4$" and type A valve: D06F-11/4A

The valve is available in the following sizes: $^1/_2$", $^3/_4$", 1", $1^1/_4$" $1^1/_2$" and 2".

		RV260-...LFA
Connection type:	external threaded connection set on in- and outlet	•

Note: ... = space holder for connection size

Note: Ordering number example for 1": RV260-1LFA

Accessories

	Description		Dimension	Part No.
	**M07M**	**Pressure gauge** Housing diameter 63 mm, rear connection thread G $^{1}/_{4}$"		
		Range: 0 - 4 bar		M07M-A4
		Range: 0 - 10 bar		M07M-A10
		Range: 0 - 16 bar		M07M-A16
		Range: 0 - 25 bar		M07M-A25
	**ZR06K**	**Double ring wrench** For removal of spring bonnet and filter bowl		
				ZR06K
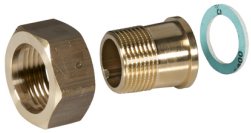	**VST06A**	**Connection set** Threaded connections		
			$^{1}/_{2}$"	VST06-1/2A
			$^{3}/_{4}$"	VST06-3/4A
			1"	VST06-1A
			$1^{1}/_{4}$"	VST06-11/4A
			$1^{1}/_{2}$"	VST06-11/2A
			2"	VST06-2A
	**VST06B**	**Connection set** Solder connections		
			$^{1}/_{2}$"	VST06-1/2B
			$^{3}/_{4}$"	VST06-3/4B
			1"	VST06-1B
			$1^{1}/_{4}$"	VST06-11/4B
			$1^{1}/_{2}$"	VST06-11/2B
			2"	VST06-2B

Spare Parts

Pressure Reducing Valve CD06F-LFA, from 2017 onwards

Overview

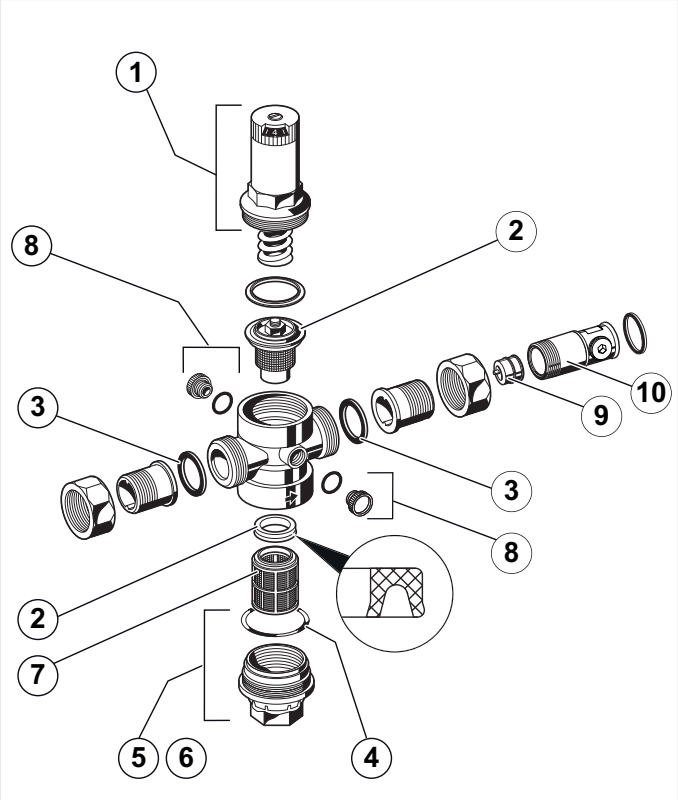

	Description	Dimension	Part No.
1	**Spring bonnet complete**		
		1/2" - 1"	0901515
		1" + 1 1/4"	0901516
		1 1/2" + 2"	0901518
2	**Valve insert complete (without filter)**		
		1/2" + 3/4"	D06FA-1/2
		1" + 1/4"	D06FA-1B
		1 1/2" + 2"	D06FA-11/2
3	**Union seal washer (10 pcs.)**		
		1/2"	0901443
		3/4"	0901444
		1"	0901445
		1 1/4"	0901446
		1 1/2"	0901447
		2"	0901448
4	**O-ring set (10 pcs.)**		
		1/2" + 3/4"	0901246
		1" + 1 1/4"	0901499
		1 1/2" + 2"	0901248
5	**Clear filter bowl with O-ring**		
		1/2" + 3/4"	SK06T-1/2
		1" + 1 1/4"	SK06T-1B
		1 1/2" + 2"	SK06T-11/2

Spare Parts

Pressure Reducing Valve CD06F-LFA, from 2017 onwards

Overview

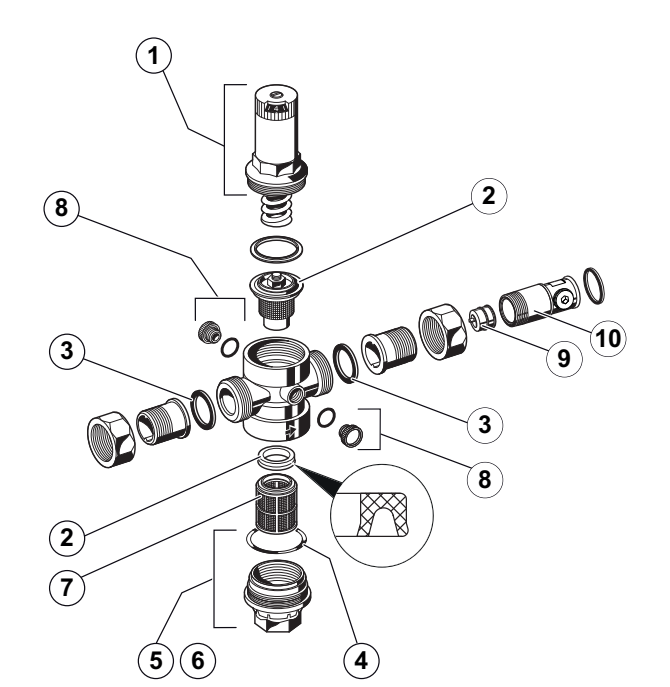

	Description	Dimension	Part No.
6	**Brass filter bowl with O-ring**		
		1/2" + 3/4"	SM06T-1/2
		1" + 1 1/4"	SM06T-1B
		1 1/2" + 2"	SM06T-11/2
7	**Replacement filter insert**		
		1/2" + 3/4"	ES06F-1/2A
		1" + 1 1/4"	ES06F-1B
		1 1/2" + 2"	ES06F-11/2A
8	**Blanking plug with O-ring R 1/4" (5 pcs.)**		
		1/2" - 2"	S06K-1/4
9	**Check valve**		
		1/2"	2166200
		3/4"	2110200
		1"	2164400
		1 1/4"	2164500
		1 1/2"	2164600
		2"	2164700
10	**Plug (10 pcs.)**		
		1/2"	S06LFA-1/8
		3/4" - 2"	S06LFA-1/4

Manufactured for
and on behalf of
Pittway Sàrl, Z.A., La Pièce 4,
1180 Rolle, Switzerland
by its authorised representative
Ademco 1 GmbH

For more information
homecomfort.resideo.com/europe
Ademco 1 GmbH, Hardhofweg 40,
74821 MOSBACH, GERMANY
Phone: +49 6261 810
Fax: +49 6261 81309

Subject to change. EN0H-1062GE23 R0420